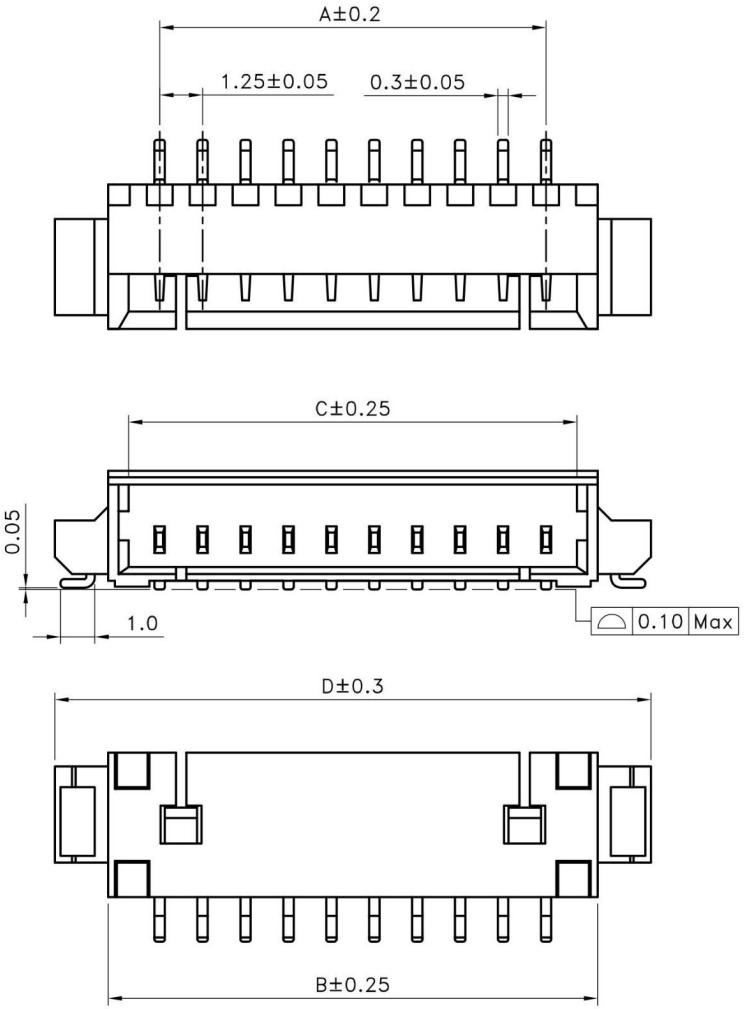

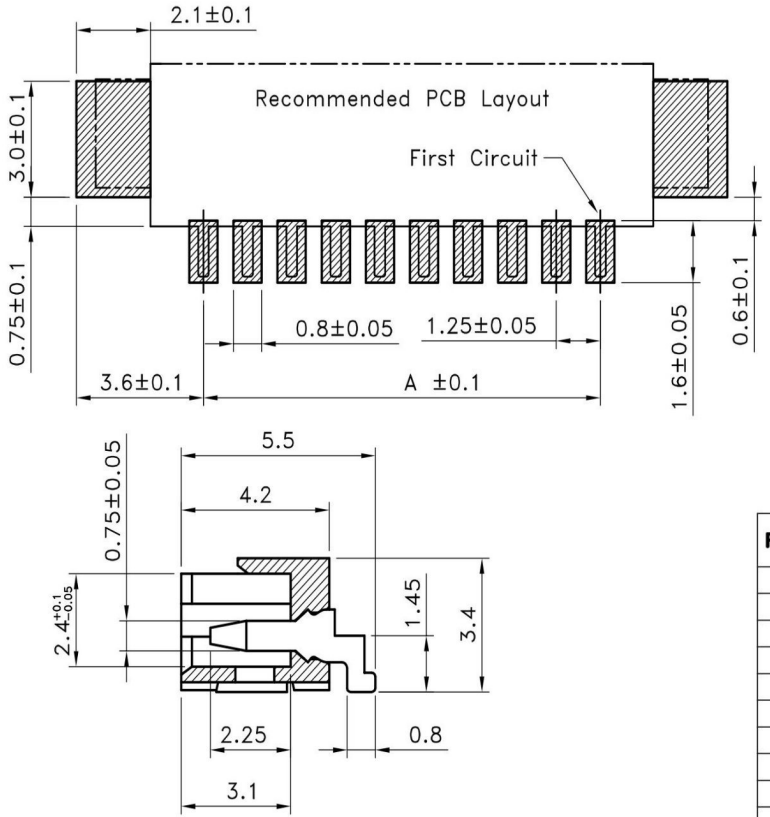

■ **SPECIFICATIONS**

- Voltage Rating : 125V AC/DC
- Current Rating : 1A AC/DC
- Withstanding Voltage : 250V AC /minute
- Insulation Resistance : 100MΩ min
- Temperature Range : - 40℃ to + 85℃
- Contact Resistance : 20mΩ max

■ **WAFER**

- Poles : 2 - 15(SMT Type)
- Material : Contact : Brass, Tin Plated
  Base : Nylon PA46 UL94V-0

Poles	Dimensions (mm)			
	A	B	C	D
2	1.25	4.25	3.05	7.10
3	2.50	5.50	4.30	8.35
4	3.75	6.75	5.55	9.60
5	5.00	8.00	6.80	10.85
6	6.25	9.25	8.05	12.10
7	7.50	10.50	9.30	13.35
8	8.75	11.75	10.55	14.60
9	10.00	13.00	11.80	15.85
10	11.25	14.25	13.05	17.10
11	12.50	15.50	14.30	18.35
12	13.75	16.75	15.55	19.60
13	15.00	18.00	16.80	20.85
14	16.25	19.25	18.05	22.10
15	17.50	20.50	19.30	23.35

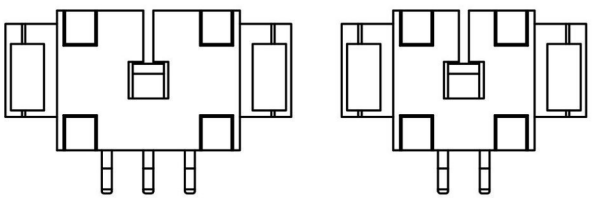

3 Circuit　　2 Circuit

RoHS Compliant

Gold Star Connectors Co., Ltd.

APPD. 核准	Betty	SCALE 比例	參考
DWG. 製圖	Betty	UNIT 單位	MM
DATE 制表日	2012/02/06	PAGE 張數	1 OF 1

TOLERANCE	
.0	±0.3
.00	±0.2
.000	±0.1

SIZE. 紙張尺寸 A4

REV. 版次 B

PART NAME 品名: 90°(RA) 1.25mm SMD CONNECTOR

PART NO. 料號: MNCWS-xxR