THIS DRAWING IS UNPUBLISHED.
VERTRAULICHE UNVEROEFFENTLICHTE ZEICHNUNG
RELEASED FOR PUBLICATION ,1998
FREI FUER VEROEFFENTLICHUNG
© COPYRIGHT 1998 BY AMP INCORPORATED. ALL RIGHTS RESERVED.
ALLE RECHTE VORBEHALTEN

MATED WITH:
PASSEND ZU:
Bg1

LOC	DIST
AI	-

PROJEKT NR.: -

REVISIONS
AENDERUNGEN

P	LTR	DESCRIPTION BESCHREIBUNG	DATE	DWN	APVD
	A4	Text for packaging corrected ECR-08-001492	17.01.08	SR	ST

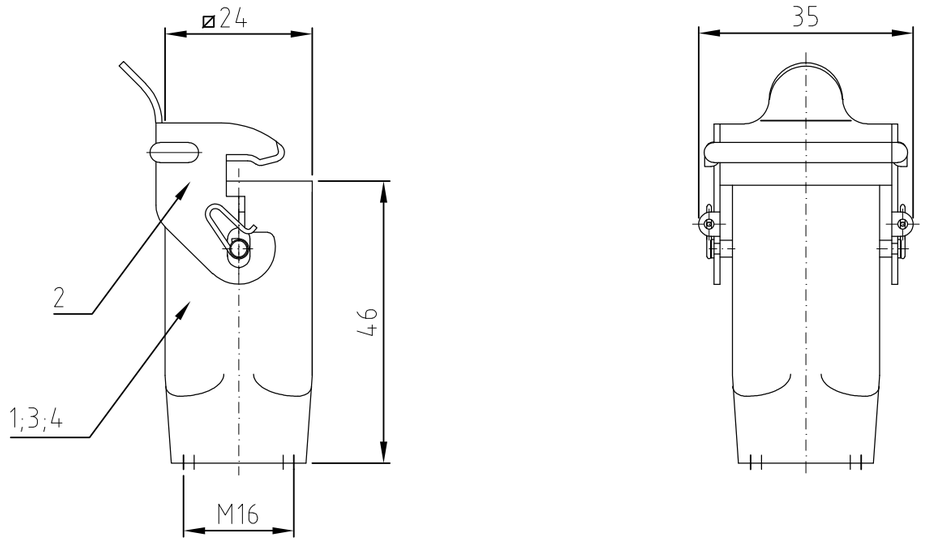

Notes

1. Material: zink diecast
2. Surface: - powder coated grey
   - varnish black
3. Varnish on the inside not necessarily
4. Special packing
   Packaging quantity 100 pieces
5. Packaging quantity 10 pieces

0-5	0-4	0-3	0-1	DESCRIPTION	MATERIAL	SURFACE	COLOR	ITEM NO. POS.	NOTES
1				Cable-to-cable hood	zink diecast (1)	blue passivation (1)	black (2)	4	
	1			Cable-to-cable hood	zink diecast	blue passivation	without varnish	3	
1	1	1	1	Side clip	steel	zinc plated	blue	2	
		1	1	Cable-to-cable hood	zink diecast		grey	1	

0-5 (5)	0-4 (5)	0-3 (4)	0-1 (5)
HA-EMV.3.KDO-LB.1.M16.Z	HA-EMV.3.KDO-LB.1.M16.Z	HA.3.KDO-LB.1.M16.Z.KM	HA.3.KDO-LB.1.M16.Z

ORDERING TEXT / BESTELLTEXT

THIS DRAWING IS A CONTROLLED DOCUMENT FOR AMP INCORPORATED.
IT IS SUBJECT TO CHANGE AND THE CONTROLLING ENGINEERING ORGANIZATION SHOULD BE CONTACTED FOR THE LATEST REVISION.
DIESES ZEICHNUNGSDOKUMENT WIRD DURCH AMP INCORPORATED KONTROLLIERT.
AENDERUNGEN, DIE DEM TECHNISCHEN FORTSCHRITT DIENEN, SIND VORBEHALTEN.
DEN JEWEILS LETZTGUELTIGEN AENDERUNGSSTAND ERFAHREN SIE AUF ANFRAGE.

DIMENSIONS: DIMENSIONEN: mm

TOLERANCES UNLESS OTHERWISE SPECIFIED: ALLGEMEINTOLERANZEN
n. ISO 8015
n. ISO 2768 - mH -E
n. DIN 16901 - 140
0 PLC #
1 PLC #
2 PLC #
3 PLC #
ANGLES /WINKEL #

MATERIAL (1)

FINISH /OBERFLAECHE/FARBE (2)

DWN	Schneider	07.01.2003
CHK	Schweiger	07.01.2003
APVD	-	
PRODUCT SPEC PRODUKTSPEZ.	-	
APPLICATION SPEC VERARBEITUNGSSPEZ.	-	
WEIGHT GEWICHT	-	

Tyco Electronics
HTS Elektrotechnik
53819 Neunkirchen, Germany

NAME
Cable-tocable hood
Kupplungsgehäuse HA.3.KDO-LB.1.M16.Z

SIZE	CAGE CODE	DRAWING NO ZEICHNUNGS-NR.	RESTRICTED TO NUR FUER
A3	00779	C- 1106403	-

CUSTOMER DRAWING /KUNDENZEICHNUNG

SCALE MASSSTAB	SHEET BLATT	OF VON	REV.
1 : 1	1	1	A4